Trade of Metal Fabrication	
Module 2:	Thermal Processes
Unit 5:	Horizontal Tee Piece
	Phase 2

Table of Contents

List of Figures

List of Tables

Document Release History

Date	Version	Comments
24/10/06	First draft	
13/12/13	SOLAS transfer	

Module 2 – Thermal Processes

Unit 5 – Horizontal Tee Piece

Duration – 15 Hours

Learning Outcome:

By the end of this unit each apprentice will be able to:

- Adjust current settings to correct setting for exercise
- Make good pick ups
- Maintain correct arc length, electrode slope and tilt angles and electrode travel speed
- Successfully weld a horizontal/vertical T-fillet using 3 passes
- Achieve sufficient root penetration

Key Learning Points:

Sk Rk	Identification of longitudinal, angular and transverse distortion.
Sk	Pick up - stop and restart.
M Sk	Arc length and electrode slope and tilt angles - rate of travel.
Sk	Control of distortion. *(See "Control of Distortion (Welding)" section in Module 2 Unit 4).*
Sk	Joint preparation.
Sk	Uniformity of weld profile and penetration.
Rk	Identification of weld symbols.
H Rk	Safety standards and precautions.
Rk	Introduction to other varieties of welding rods e.g. cast iron, stainless steel, low hydrogen, hard facing and dissimilar metals.
M	Calculations, surface area and volume of weld metal.
P	Ability, initiative, presentation and standard of work.

Training Resources:

- Manual metal arc welding plant – safety clothing and equipment
- 3.2 electrodes
- Welding booths and extractors
- Samples of cast iron, stainless steel, low hydrogen welding rods
- Handouts and films
- 50 x 10 x 200 long M.S. flat bar

Key Learning Points Code:

M = Maths D= Drawing RK = Related Knowledge Sc = Science

P = Personal Skills Sk = Skill H = Hazards

Stainless Steel

"Stainless Steel" is a common term used when referring to chromium alloyed and chromium-nickel alloyed steels. There are magnetic and non-magnetic types. There are a large number of alloy types and each possess some specific properties as to corrosion resistance and strength. A check with the manufacturer is recommended when in doubt about the specific properties of an alloy. Some general characteristics of stainless steels will be discussed.

The chromium-nickel stainless steels are considered readily weldable. Normally the welding does not adversely affect the strength or ductility of the deposit, parent metal, or fusion zone. The filler metal used should be of a compatible, similar composition to the base metal. The heat conductivity of these steels is about 50% that of mild steels, therefore, the heat is concentrated in the weld area rather than being dissipated throughout the work. Thermal expansion is usually about 50% greater than mild steel. This increases the tendency for distortion on thin sections.

The weld area should be thoroughly cleaned. Protective paper or plastic coatings are applied to many stainless sheets. Foreign material may cause porosity in welds. Any wire brushing should be done with stainless wire brushes to prevent iron pick-up on the stainless surfaces. As with other welding procedures, clean dry filler metal should be used and proper precautions taken to prevent contamination during welding. Table 1 contains parameters which will be a guide for welding stainless steel.

Values shown in this chart are for single pass welds on the thinner sections, double pass welds on heavier material, and when out-of-position. Many job conditions will affect actual amperages, flow rates, filler rod and tungsten used. Some of these job conditions are:

- Joint Design and Fit-up
- Job Specifications
- Use of Backing (Gas, Rings, Bars)
- Specific Alloy
- Operator

Metallurgically, heat input can be critical. On many applications it is desired to keep the heat input as low as possible. In the heat affected zone a metallurgical change lakes place known as carbide precipitation. If corrosion resistance is a big factor in service, it will be noticed that some of the corrosion resisting properties of the plate in the heat affected zone are lost. This is due to that area remaining in the temperature range (450 - 800°C) long enough for carbide precipitation to occur. Keeping heat input to a minimum is necessary in this situation.

The longer the work is at the 450 - 800°C temperature, the greater the precipitation. Rapid cooling through this range will help keep precipitation at a minimum. On some types of stainless steel, niobium or titanium is added to prevent carbide precipitation. It is important that the filler metal used is of the same general analysis as the material being welded.

Stainless Steel - Manual Welding - Direct Current - Straight Polarity						
Metal Thickness	Joint Type	Tungsten Electrode Diameter	Filler Rod Diameter (If Required)	Amperage	Gas	
					Type	Flow l/min
1,6 mm	Butt Lap Corner Fillet	1,6 mm	1,6 mm	40-60 50-70 40-60 50-70	* Argon	4 4 4 4
3,2 mm	Butt Lap Corner Fillet	2,4 mm	2,4 mm	65-85 90-110 65-85 90-110	* Argon	5 5 5 5
4,8 mm	Butt Lap Corner Fillet	2,4 mm	3,2 mm	100-125 125-150 100-125 125-150	* Argon	5 5 5 5
6,4 mm	Butt Lap Corner Fillet	3,2 mm	4,0 mm	135-160 160-180 135-160 160-180	* Argon * Argon	5 5 5 5

Table 1 - Parameters for Welding Stainless Steel

Horizontal-Vertical Fillet Welds

The diagram illustrates the technique for depositing H-V fillet welds.

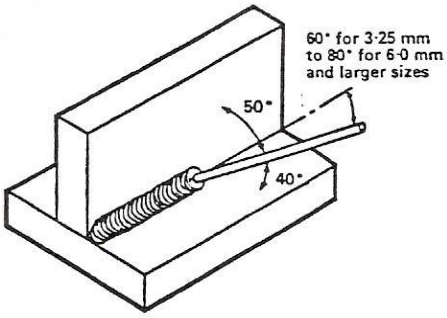

Note The reason for directing the electrode at angles of 50° to the vertical plate and 60° to 80° to the direction of travel, instead of holding it midway between the plates, is to counteract the tendency for the weld metal to fall to the horizontal plate.

The slag will run down, giving the weld an appearance of being more on the bottom plate. Do not be deceived by this, but watch both slag and metal closely and deposit the metal evenly on both plates. The correct shape of fillet is very slightly convex, with equal leg lengths and no undercut of the plates at the sides of the weld. Each electrode has a natural run length at which it works best. Typical leg lengths for various electrode sizes are as follows:

fillet leg length		electrode size	approx. run length	
mm	in	mm	mm	in
4.0	5/32	3.25	300	12
5.0	3/16	4.0	300	12
6.0	1/4	5.0	300	12

Table 2 - Typical Leg Lengths for Various Electrode Sizes

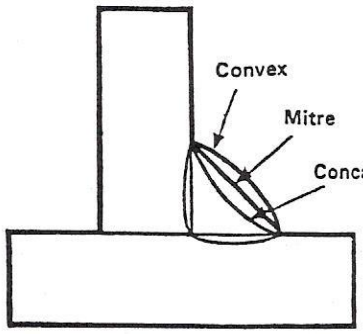

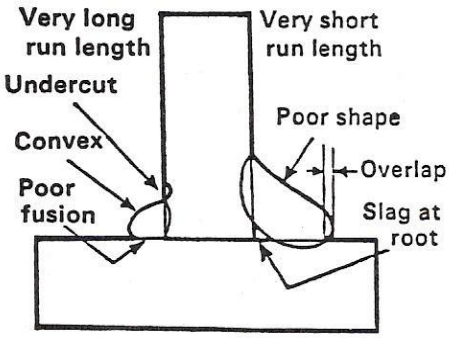

The reasons for the faults shown opposite are:

Very long run length. The electrode is travelling so fast that there is not time for proper fusion to take place in the corner. The weld metal freezes rapidly in the form of a bead.

Very short run length. The arc stays too long in one place causing the metal to run down. Because of the thickness of the run the quantity of slag is excessive and it becomes uncontrollable.

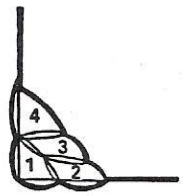

4-Run fillet

Multi-Run Fillets

Large fillet welds are built up in several runs. Generally multi-run horizontal-vertical fillets have each run made with the same size of electrode at the same run lengths.

Horizontal Butt Welds

The first runs of a horizontal butt weld are fairly heavy and are made with a medium current and a circular movement. The last run is made with a low current.

The greatest difficulty with this type of weld is to properly fuse into the top plate without undercutting it. This is avoided by keeping a close arc and a small circular motion for the first run and by a close arc and no weave for the other runs.

After the first two runs have been made, this weld is often completed by two welders, one on each side of the joint, working together, thus reducing distortion to the absolute minimum.

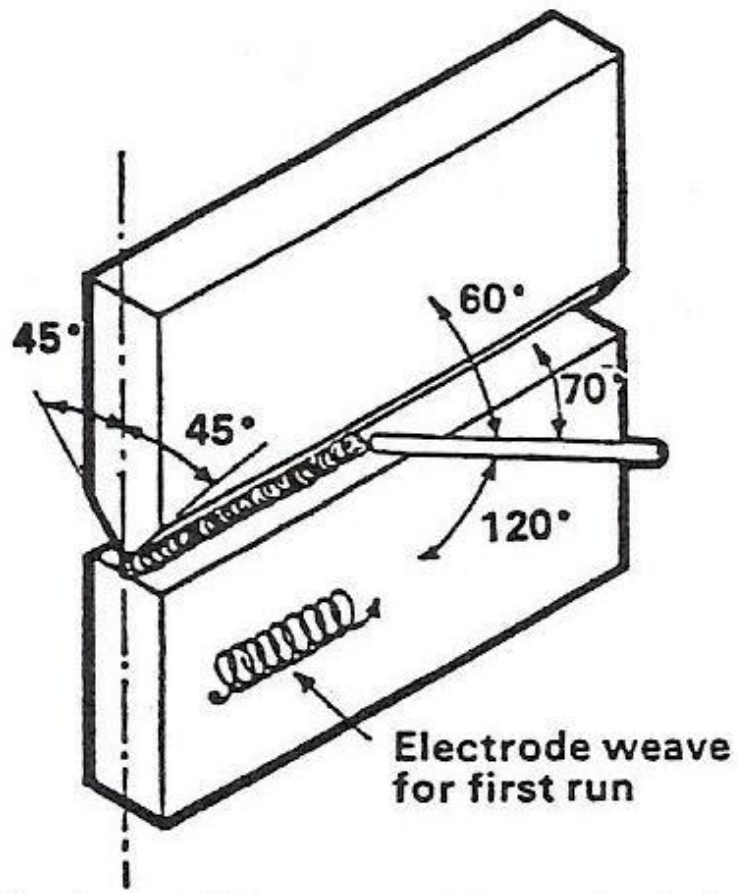

Figure 1 - Horizontal Butt Weld in Vertical Plate

Hard-Facing

(Building up of worn surfaces)

For building up surfaces subjected to a large amount of wear, it is usual to deposit a rod which has special hard-resisting properties. There is a large range of high quality rods available, for example Croni 29/9, which have cobalt/nickel and other hard wearing qualities that may be suitable for building up gear teeth, splines, keyways and worn parts in general.

Deposited Weld Metal Volume

With a current of 160 amperes and the correct speed of travel a 4.0 mm electrode will deposit a weld of approximately 200 mm to 230 mm (8 in. to 9 in.) in length. Slower travelling of the electrode will result in a run which is thicker and shorter. Faster travelling will give a thinner and longer weld. Variation in the width or thickness of individual runs is usually due to irregular movement of the arm.

Distortion

To some degree distortion is present in all forms of welding. In many cases it is so small that it is barely perceptible, but in other cases allowance has to be made before welding commences for the distortion that will subsequently occur. The study of distortion is so complex that only a brief outline can be attempted here.

Causes of Distortion

Longitudinal Distortion

When a deposit is made on one side of a joint, there is a tendency for the plate to bend upwards as it cools.

Transverse Distortion

If a butt weld is made between two plates that are free to move the edges will be drawn together. In extreme cases these may overlap.

Angular Distortion

Angular distortion pulls the plate being joined out of alignment. The tendency for angular distortion increases with the number of runs deposited.

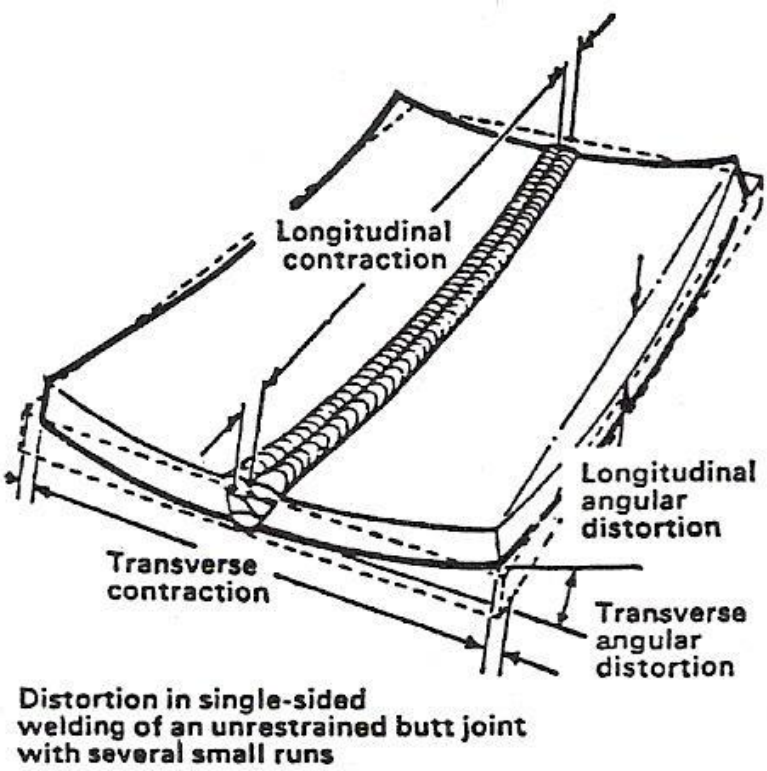

Figure 2 - Causes of Distortion

Overcoming Distortion

The amount of distortion which may be minimised by presetting depends upon:

- The amount of welding
- The number of runs
- The degree of restraint
- The original condition of the parts to be welded
- The procedure of welding

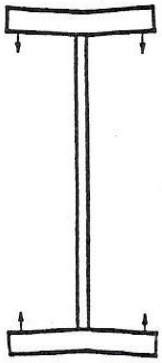

Allowing for distortion by pre-setting

Presetting

It is sometimes possible to tell from past experience or to find by trial and error (or less frequently to calculate) how much distortion will take place in a given welded structure. By correct presetting of the components to be welded, contractional stresses can be made to pull the parts into correct alignment.

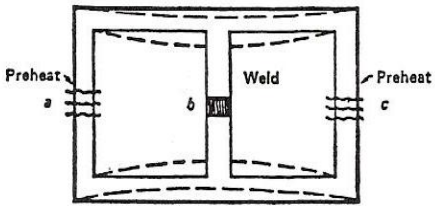

Dotted lines show effect if no preheat is used

Distribution of Stresses

Distortion may be reduced by selecting a welding sequence which will suitably distribute the stresses so that they tend to cancel each other out. Choice of a suitable weld sequence is probably the most effective method of overcoming distortion, although an unsuitable sequence may exaggerate it. Simultaneous welding of both sides of a joint by two welders is very often successful in eliminating distortion.

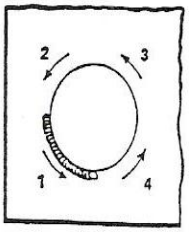

Welding patches
Allow to cool between each stage

Restraint of Parts

Forcible restraint of the components being welded may be used to prevent distortion. Jigs, positioners and tack welds are methods employed with this in view.

Preheating

Suitable preheating of parts of the structure other than the area to be welded can be sometimes used to reduce distortion. A simple application is illustrated. By removing the heating source from a and c as soon as welding is completed, the sections a, b and c will contract at a similar rate, thus reducing distortion.

Peening

This is done by hammering the weld while it is still hot. The weld metal is flattened slightly and because of this the tensile stresses are reduced a little. The effect of peening is relatively shallow and is not advisable on the last layer.

Welding Alloys for Maintenance and Repair

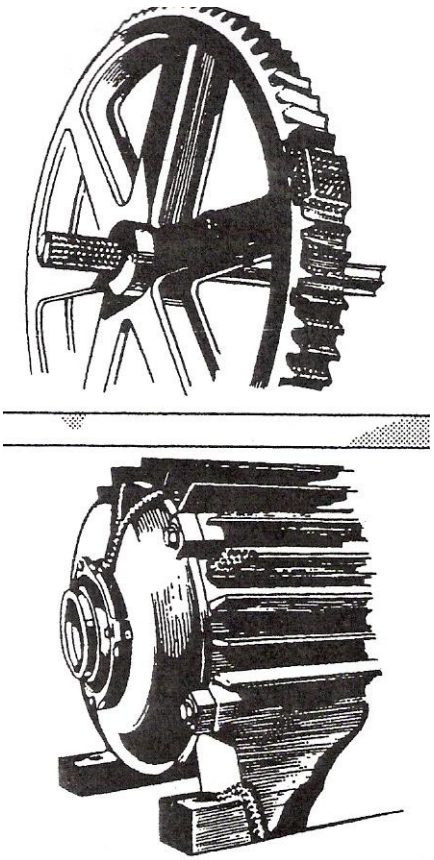

KESTRA, the only company in the world that produces Welding Alloys Exclusively for Maintenance! and Repairs.

All other welding rod manufacturers make rods designed for production!

As you know, the problems in production welding are entirely different than maintenance and repair welding.

IN PRODUCTION WELDING they weld one product, such as frames. The engineering department determines the alloy content of the metal and gets an adequate rod to do that simple job. Plus the fact that the welder becomes very efficient, because he welds on the same materials eight hours a day.

WELDING ALLOYS ARE DESIGNED TO SOLVE MAINTENANCE PROBLEM SUCH AS:

- On site repairs without dismantling or preheating
- Dissimilar metals and poor fit joints
- Unknown base metal compositions
- Vertical and overhead welding

Symbol Keys for KESTRA Electrode

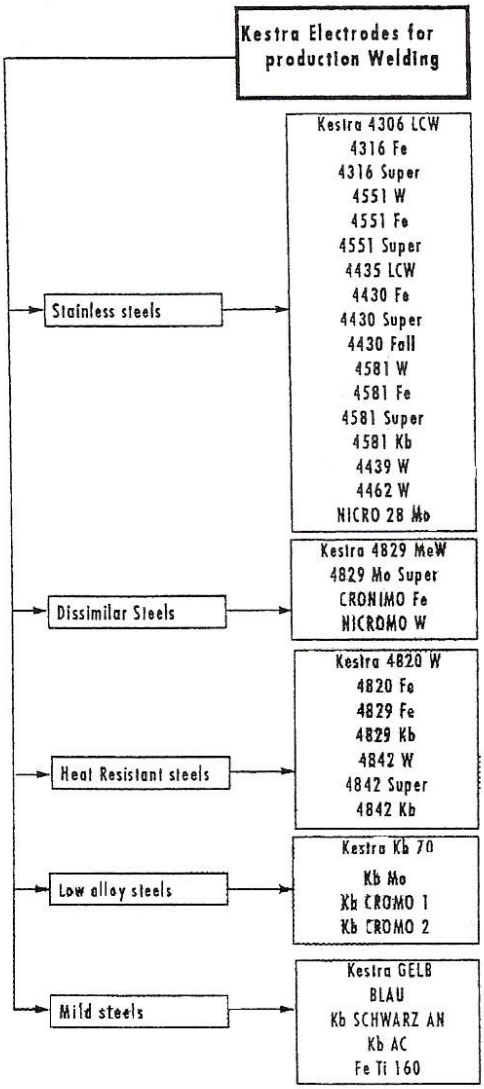

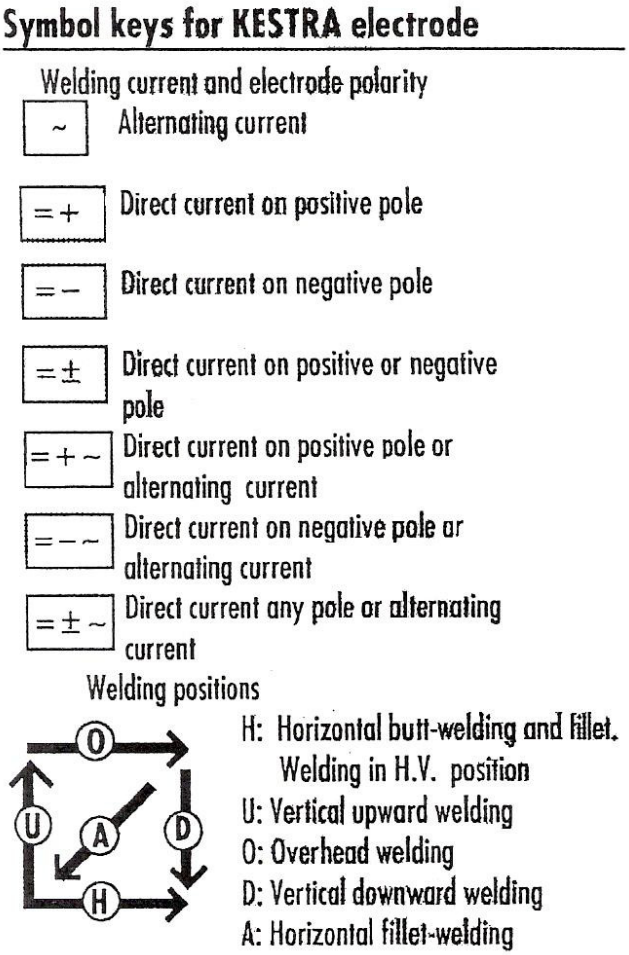

Figure 3 - Symbol Keys for KESTRA Electrode

KESTRA Gold 2 AC-DC

The most successful electrode for cold welding cast iron.

The special designed coating of KESTRA Gold 2 allows the use of low welding current.

Therefore:

- The casting is only subjected to little heat
- The chilling effect in the transition zones is reduced

APPLICATIONS

- Defective castings – valve seats
- Machining errors – Gear teeth
- Filing in drill holes – Pump housings
- Motor cylinder blocks – Cylinder houses
- Electric motor cases and frames
- Cylinder wall defects – High nickel castings

Tensile strength more than 64,000 PSI (4400 N/mm²). Hardness of weld metal as deposited approximately 160HB.

Take KESTRA Gold 2;

- When a maximum in machinability is required
- When porosity-free welds are wanted
- When you have problems with any type of casting
- When excellent weldability, little spattering and easy slag removal is wanted Outstanding welding Properties on AC and DC/EP (reverse polarity)

Metric	**Diameter**	**Amperage (AC-DC)**	**PktKilo**
2.50	12	60-70	4
3.25	10	80-100	5
4.00	8	120-140	5
5.00	6	160-180	5

KESTRA Supernife AC-DC

THE BEST CRACK RESISTANT ELECTRODE FOR CAST-IRON.

The special core-wire and the complex formulation of this alloy provide deposits of high physical properties on practically all types of cast iron:

Grey iron	Spheroidised	Ductile iron
Nodular iron	Connections between cast iron and all kinds of steel	Cast iron
Malleable iron		
Meehanitee		

SPECIAL FEATURES:

- No spattering and easy slag removal
- No overheating of the electrode
- Special coating tend to avoid porosity
- Excellent toughness of deposit
- Excellent all position welding characteristics
- Good machinability of welding
- With proper application leak-proof deposits are possible
- Tensile strength is excellent and exceeds all cast irons.
  The most efficient way to repair your broken cast iron equipment.

Repair of:

- Cylinder houses – Motor block
- Electric motor cases – Gear teeth
- Pump housings – Cylinder wall defects
- Defective castings

Mechanical properties of weld deposit.

Tensile strength – 70,000 PSI (480 N/mm²).

Yield strength – 50,000 PSI (350 N/mm²).

Elongation – up to 18%, Hardness – approx. 180 HB.

In spite of proper elongation highly crack resistant.

Outstanding welding properties on AC and DC/EP (reverse polarity).

Metric	**Diameter**	**Amperage (AC-DC)**	**PktKilo**
2.50	12	50-70	4
3.25	10	70-90	5
4.00	8	100-130	5

Welding and Riveting

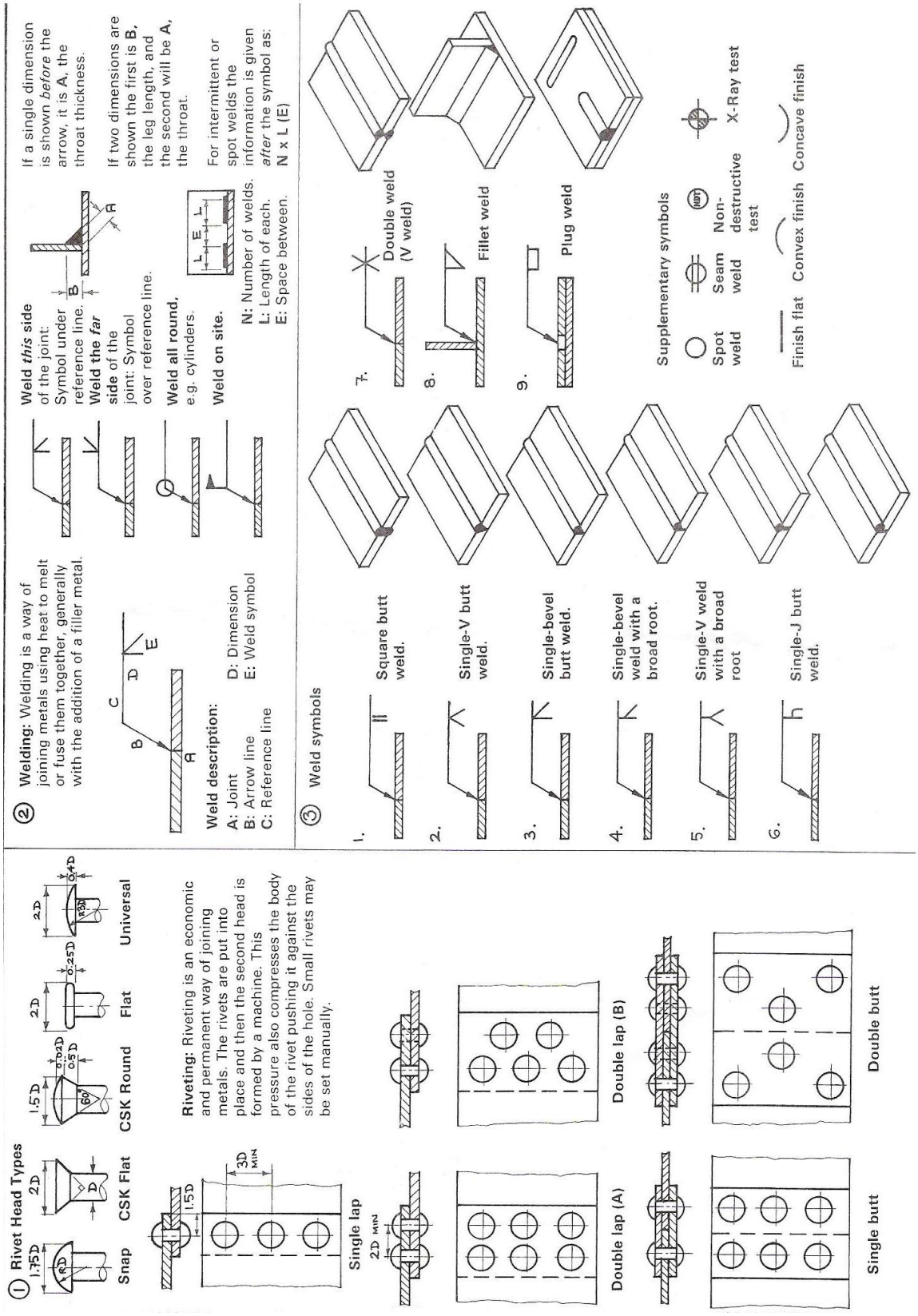

Figure 4- Welding and Riveting

KESTRA Croni 29/9 AC-DC

The most widely used electrode for maintenance and repair welding.

For all dissimilar, problem and unknown steel combinations KESTRA Croni 29/9.

- The most crack resistant filler metal
- Excellent corrosion and heat resistance
- Outstanding weldability in all positions
- Produces smooth, porosity free welds without undercut or spatter

Welding joints with KESTRA Croni 29/9 have outstanding technical data.

- Tensile strength over 120,000 PSI (800 N/mm²)
- Elongation more than 25%
- Hardness First pass: 260 HB as deposited
- Multi pass: 290 HB as deposited
- Work hardness up to 450 HB

Repair of:

Tools – Dies – Springs – Rollers - Chain links - Gear teeth - Journal boxes - Draw bars hydraulics – Camshafts - Scraper teeth - Pinions steel castings - Crane booms

Also ideal as an underlayment prior to hardfacing.

The most important welding alloy for:

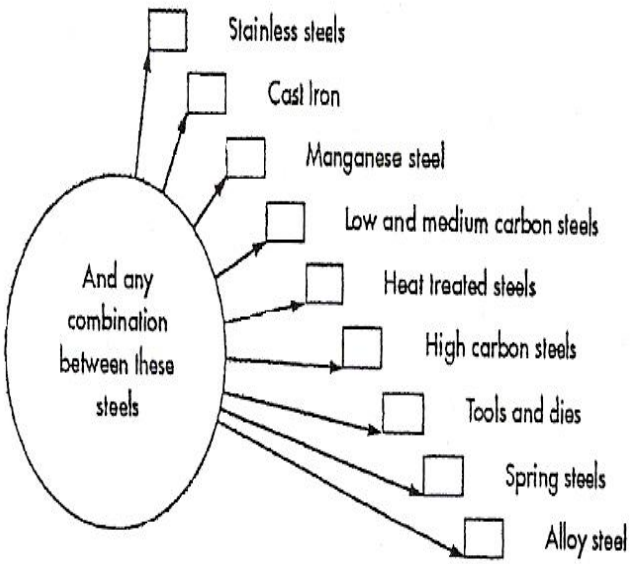

Features of KESTRA Croni 29/9:

- Special developed moisture resistant coating
- Weldment is machinable
- No overheating of electrodes
- Easy and complete slag release
- Work hardness in use

Use AC or DC/EP (reverse polarity)

Electrode Diameter mm	**SWG**	**Ampere**	**PktKilo**
2.0	14	40-60	3
2.5	12	60-80	4
3.2	10	80-100	5
4.0	8	110-130	5
5.0	6	150-170	5

KESTRA 1U-6U-12U

The first cobalt base electrode produced from drawn cobalt wire!

Exclusively engineered for hi-heat impact applications.

Withstands molten metal abrasion and impact.

Can be applied contact or gap by beading or weaving.

Extreme "hot" toughness.

Metal to metal wear resistance.

Will not seize or gall at high temperatures.

Smooth, dense welds that are virtually crack free.

Low Amperage - minimising base metal dilution or,

High amperage - high deposition rate without overheating - without affecting physical properties.

APPLICATIONS:

- Hot trim dies
- Ingot tongs
- Impellers
- Hot metal handling
- Pulveriser rolls
- Conveyor screws
- Hot rolling dies
- Exhaust valve seats
- Gas turbine buckets
- Augers
- Rocker arms
- Ladles
- Pump shafts
- Furnace parts
- Hot shear blades
- Extrusion dies for aluminium
- Cams and cam followers
- Bolt head punches

KESTRA 4829 Mo W AC-DC

An excellent all position alloy for General maintenance welding.

- Joining and cladding stainless steel.
  Heat resistant steel.
- Welding stainless to all kinds of carbon and medium alloyed steels.

APPLICATIONS:

PAPER INDUSTRY

- Hydropulves
- Pulp digester valves
- Angers

FOOD INDUSTRY

- Vats
- Sinks
- Coils
- Dairy Equipment
- Lab Equipment

PETRO-CHEMICAL INDUSTRY

- Vessels – gears – rams
- Overlay and cladding of pump houses

TEXTILE INDUSTRY

- Dies – racks – shafts
- Rollers - tools

HOSPITALS

- Instruments
- Valves
- Racks

Makes carbon steel corrosion resistant by cladding. For buffer layer before welding with stainless steel electrode KESTRA 4435 LCW. High resistance to pitting and stress corrosion. Unusually high crack resistant in spite of the high elongation. Heat resistant up to 1050 Grad C (1920 Grad F).

TECHNICAL DATA:

- Tensile strength – up to 90,000 Ps/(620 N/mm²)
- Yield strength – up to 60,000 Ps/(420 N/mm²)
- Elongation – up to 40%

ADDITIONAL FEATURES:

- All positions: Flat – horizontal – vertical up – overhead
- Smooth weld surfaces with a high degree of resistance to attacking media
- Easy slag removal and no slag residue on seam or side lap welds
- No overheating of the electrode
- Easy strike and restrike properties
- Outstanding Weldability on AC and DC/EP (reverse polarity)

Metric	Diameter	Amperage	PktKilo
2.00	14	40-60	4
2.50	12	60-90	4
3.25	10	80-110	4
4.00	8	110-140	4
5.00	6	150-180	6

KESTRA 4370 W

SPECIALLY FORMULATED FOR BUILDUP ANDFOR JOINING MANGANESE STEELS.

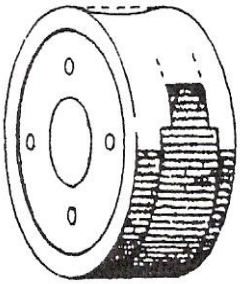

Ordinary electrodes are designed for moderate impact and some abrasion resistance and…

As you know, Manganese Steel was developed for OUTSTANDING IMPACT RESISTANCE.

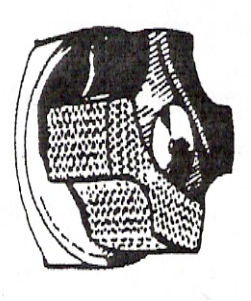

- KESTRA 4370 W was engineered with these facts in mind to provide you with these outstanding features
- Deposit is compatible to base metal manganese
- Provides a ductility barrier of “Hard as Cast” material at the fusion point
- Work hardens rapidly and uniformly
- Controlled heat input reduces shrinkage stresses and reduces warpage
- Recommended as cushioning layer before hard facing KESTRA 4370 W
- Excellent for metal-to-metal wear
- KESTRA 4370 W is ideal for wide range of applications on Manganese and Nickel-manganese parts

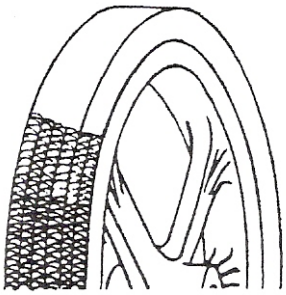

Metric	Diameter	Amperage (AC-DC)	PktKilo
2.50	12	60-80	4
3.25	10	80-100	5
4.00	8	110-130	5
5.00	6	150-170	5

Protective Equipment

Avoid exposure of yourself and others to the heat and light radiations of the welding arc.

Note:

Radiations include invisible ultraviolet and infrared rays.

Exposure of the eyes to arc emissions causes severe irritation and watering of the eyes. This symptom occurs some 4 to 12 hours after exposure.

Screening – General

Screen arc-welding and cutting operations so that persons who work in the vicinity are protected from 'flashes'.

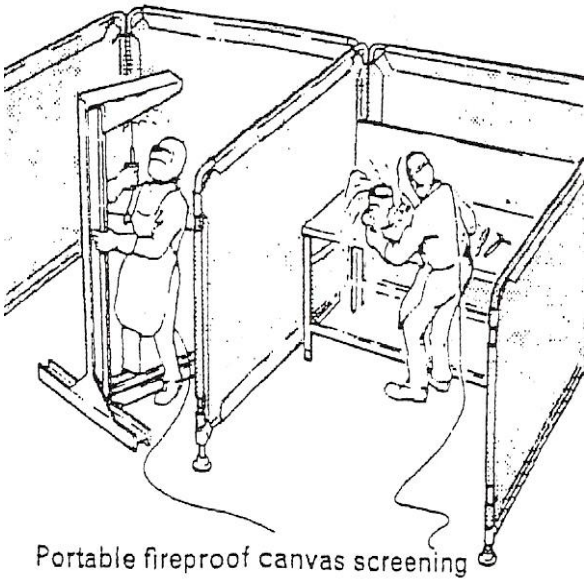

Screening – Personal

For most operations a hand held screen made of lightweight, insulating, and non reflecting material can be used. It must have an approved 'filter glass'.

Goggles alone do not give adequate protection for arc-welding and cutting operations.

Make sure that the screen is of a size and shape to shield the face, throat, wrist, and hand.

Where it is necessary to protect the head or to have both hands free a helmet type screen fitted with an approved filter should be used.

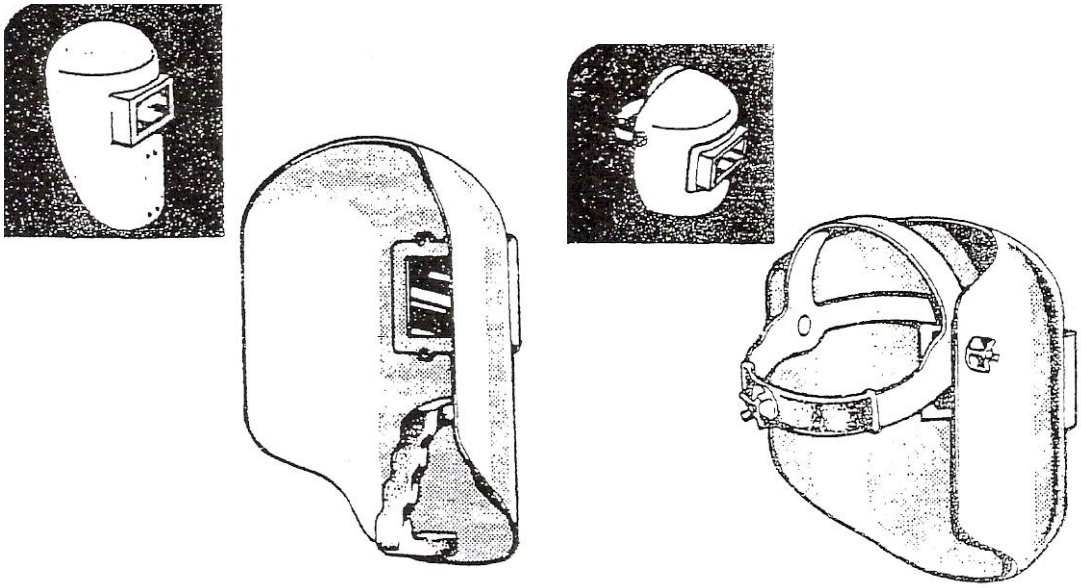

Protective Filter

Filter glasses are expensive. Protect them from damage when not in use.

Recommended Filters

B.S. 679 SHADE	TUNGSTEN ARC	METAL-ARC GAS SHIELDED	MANUAL METAL ARC
9 EW	Up to 50 amperes	Up to 75 amperes	Up to 100 amperes
11 EW	50 – 150 amperes	75 – 200 amperes	100 to 300 amperes
13 EW	Over 150 amperes		Over 300 amperes
9 EW + 4 GW*		200-400 amperes	
11 EW + 4 GW*		Over 400 amperes	

Protective Clothing

Normal Dress

Outer clothing should be free from oil, grease or flammable substances. Protect the forearms from exposure to arc rays; do not roll up sleeves.

Cuffs on overalls, turn-ups on trousers, exposed long hair and low-cut shoes are likely lodging places for sparks or globules of hot metal and slag.

Special Protection

Protect the front of the body from about the throat to the knees with suitable leather cape and apron. If only an apron is worn this must provide full protection.

Wear suitable leather gloves to protect the wrists and hands.

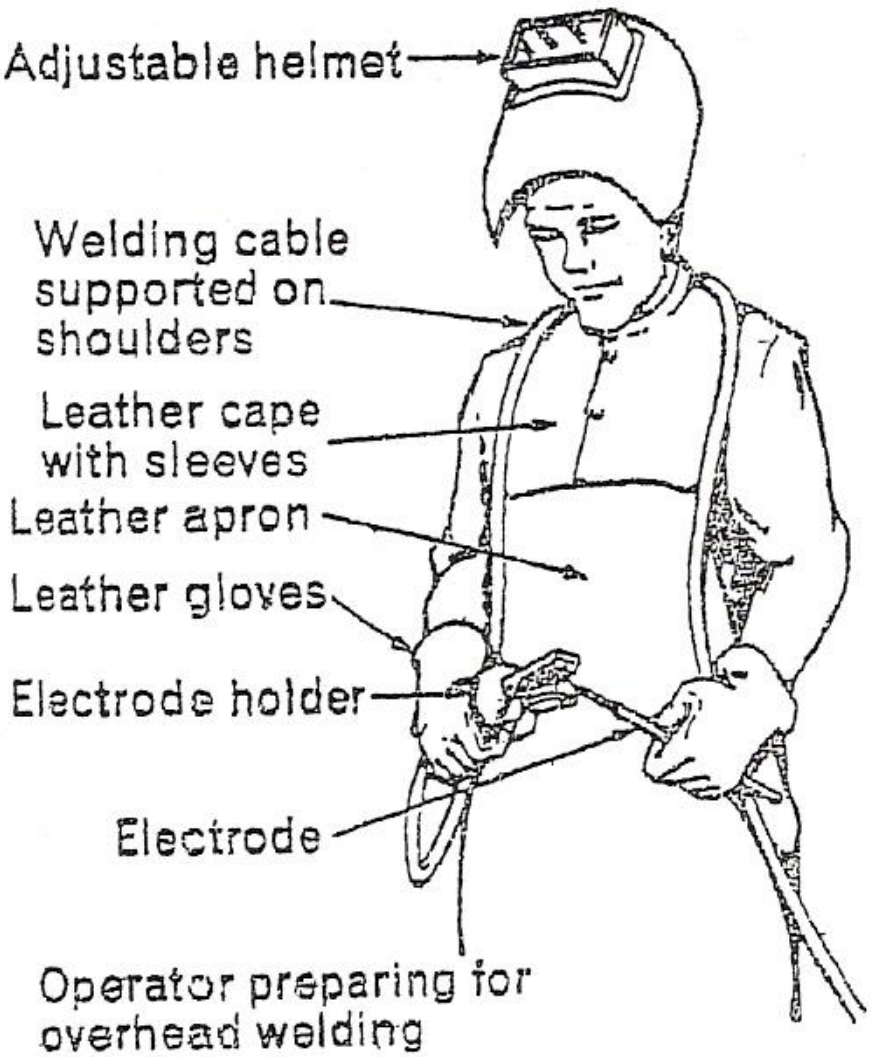

Figure 5 - Protective Clothing

General Safety Precautions and Fire Prevention

Working Area

Keep the working area tidy and free from flammable material.

When cutting material make sure that the detached portion cannot fall and cause personal injury.

Beware of the danger from beads of hot metal when arc cutting.

Ensure suitable fire extinguishing equipment is readily available and maintained in good condition.

Site Conditions

Stand on a dry wooden floor or duck board and/or wear rubber boots.

Take care when working in congested conditions or on staging. Beware of slippery and unsound surfaces.

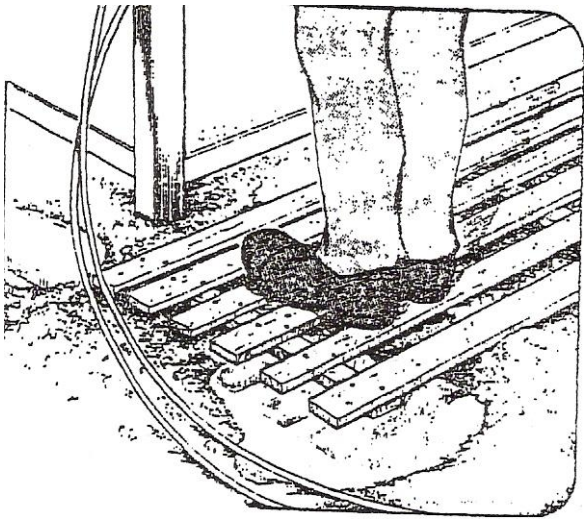

Ventilation

Make sure there is adequate ventilation during welding and cutting operations, especially when using gas-shielded processes.

Ensure any ventilation equipment is in working order.

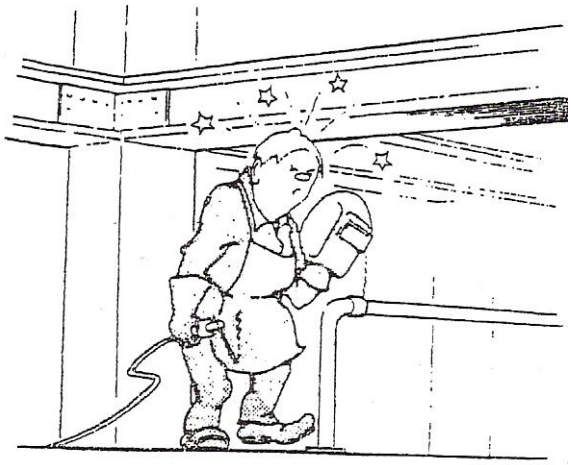

The Arc Length

Too short an arc length causes irregular build up of the molten metal. The ripples on the weld bead are not uniform with regard to both width and height. With too short an arc length it is difficult to control and maintain the arc, and there is a tendency for the electrode to 'freeze' or stick to the weld pool.

Note A normal arc length should be slightly less than the diameter of the electrode, and is generally considered to be between 1.6 and 3.2 mm.

Too long an arc causes an appreciable increase in spatter, and penetration is poor. The weld bead is wide and of poor appearance because the core wire metal is deposited in large globules instead of a steady stream of fine particles. The arc crater is flat and blistered.

Note To ensure complete penetration the arc length should be kept as short as possible to enable the heat from the arc to melt the parent metal and the electrode core-wire simultaneously. If the length is too great a considerable amount of this heat is lost to the air.

Speed of travel When the speed of travel is too fast a narrow and thin weld deposit, longer than normal, is produced. Penetration is poor, the weld crater being small and rather well defined. The surface of the weld bead has elongated ripples and there is 'undercutting'. The reduction in bead size and amount of undercutting depends on the ratio of speed and current.

Note Most manufacturers specify the length of run which may be obtained with electrodes of different types, sizes, and lengths, used under their recommended current conditions. Thus, if the length of deposit per electrode is smaller or greater than is specified, the speed of travel is either slower or faster than that intended by the manufacturer.

As the rate of travel decreases the width and thickness of the deposit increase. The weld deposit is much shorter than the normal length. The weld crater is flat. The surface of the weld bead has coarse evenly spaced ripples. With a slower rate of travel the molten weld metal will tend to pile up and cause excessive overlap of the weld bead.

Weld Symbols

SKETCH	DESCRIPTION	SYMBOL
	Square butt weld: This symbol is used to indicate a stud weld when there is no end preparation and no fillet weld.	‖
	Single-V butt weld	V
	Butt weld between flanged plates (the flanges being melted down completely)	⌒
	Butt welds between flanged plates not completely penetrated are symbolised as square butt welds with the weld thicknesses shown *s* is the minimum distance from the external surface of the weld to the bottom of the penetration.	*s* ‖
	Fillet weld	◺
	Single-bevel butt weld	V
	Single-V butt weld with broad root face	Y
	Single-bevel butt weld with broad root face	Y
	Single-U butt weld	Y
	Single-J butt weld	Y
	Backing or sealing run	◡
	Plug weld (circular or elongated hole, completely filled)	⊓
(a) Resistance (b) Arc	Spot weld (resistance or arc welding) or projection weld	○
	Seam weld	⊖

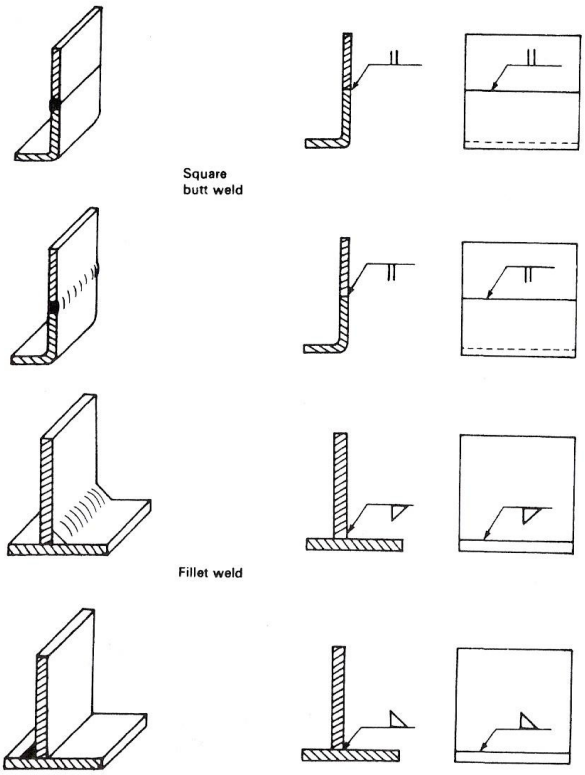

Figure 6 – Weld Symbols 1

Some examples showing significance of the arrow and position of the weld symbol in relation to the reference line.

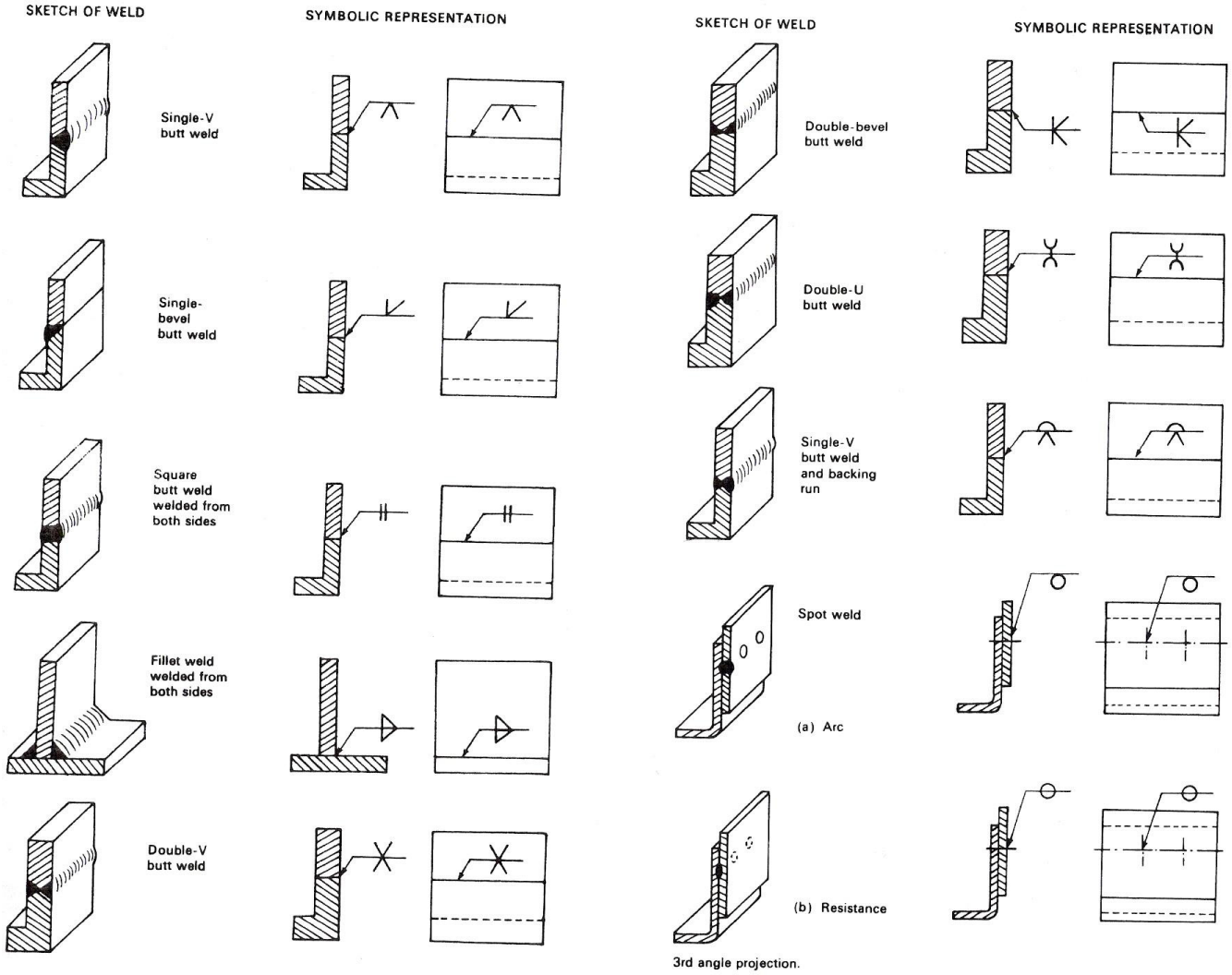

Figure 7 - Weld Symbols 2

Residual Stress and Distortion

The solidification and contraction of the weld bead will induce strain and consequently stresses in the joint. In the case of the contraction of the solid metal the stress will be equal to the change in temperature as the metal cools from its melting point to its ambient temperature. Under normal circumstances movement of the weld bead is restricted by the adjacent body panels in the vehicle structure, and the stress which could be generated is given by the Young's modulus of the material. This stress level often exceeds the elastic limit of the material and plastic deformation takes place. The stresses locked in the material, which may reach levels up to the elastic limit of the material, are called residual stresses, and the deformation of the material is known as distortion.

Residual Stresses

In a butt weld the weld bead will tend to contract longitudinally and transversely, and this will induce tensile stresses in the weld and also balancing compressive stresses in the sheet material. In the joining processes which rely on heating or fusion, it is difficult to prevent the formation of residual stresses. If the heat affected zone is ductile and defect free (as in thin-sheet panel steel) the presence of some residual stresses may be acceptable. The most common technique used to relieve residual stress in thicker materials is post-weld heat treatment. This consists of uniform heating of the joint to a temperature at which the yield stress of the material is lowered and the residual stresses are relieved by plastic deformation.

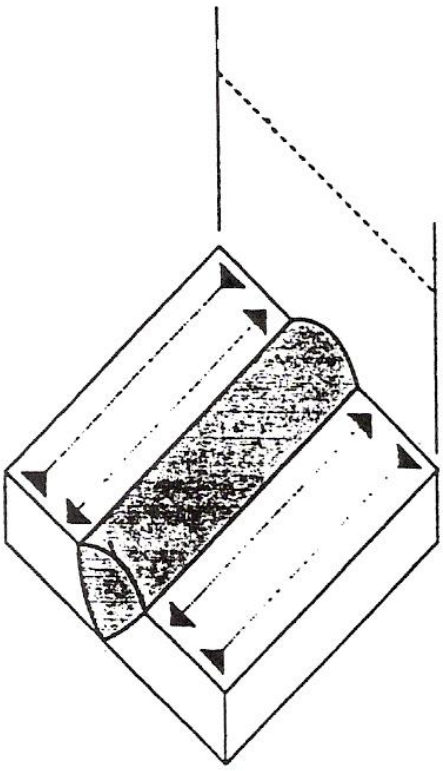

Figure 8 - Residual Stress in a Simple Butt Weld (BOC Ltd.)

Distortion

Distortion may take the form of a change in dimensions of the joint, transverse or longitudinal shrinkage, angular movement, or out-of-plane buckling.

Distortion may result in unacceptable appearance (buckled body panels), prevention of subassembly fabrication or the inability of the structure to perform its intended function (alignment of body panels after welding).

The following steps may be taken to minimise distortion:

1. Use the minimum amount of weld metal. Overwelding and excessive reinforcement should be avoided in fillet welds and flat butt welds. Intermittent or stitch welding may be used.

2. Use square edge on narrow gap procedures to reduce angular distortion when welding.

3. Use high travel speed and low heat input to limit heat build-up in the panels to be welded.

4. Use the backstep weld sequence or preset the joint.

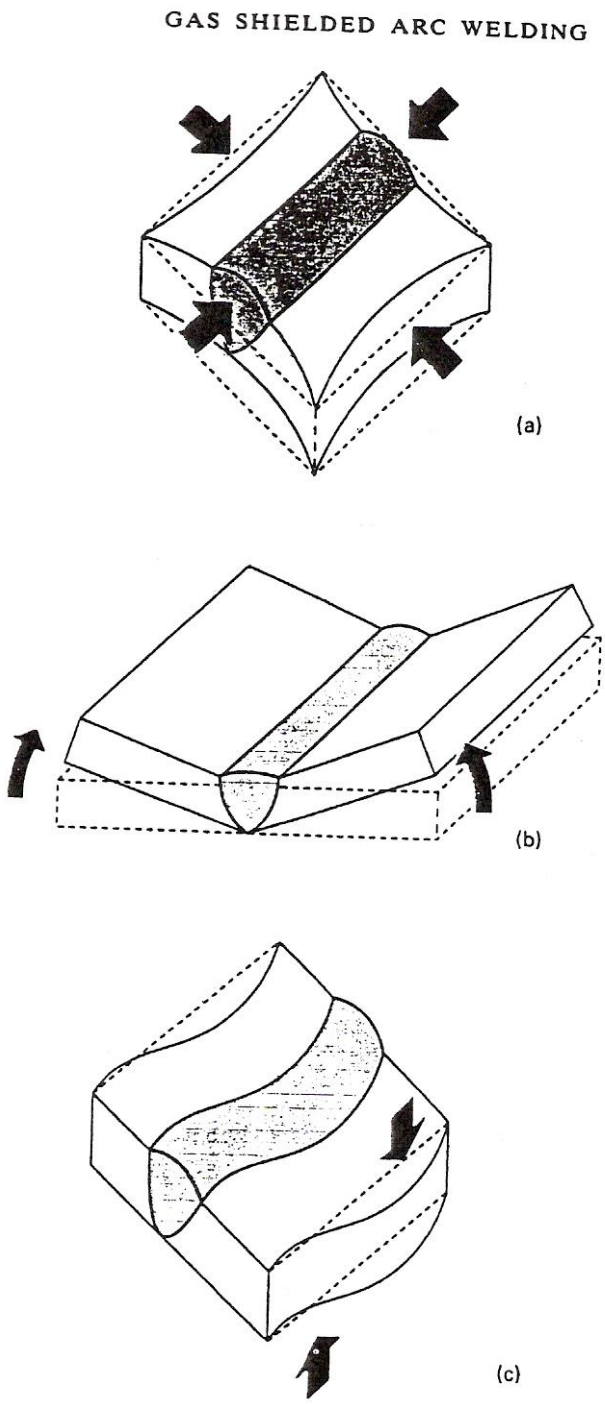

Types of distortion:

(a) longitudinal and transverse shrinkage

(b) angular distortion

(c) out-of-plane buckling distortion (BOC Ltd.)

Horizontal-Vertical Position

Single V Butt Joint

Example Procedure EP20

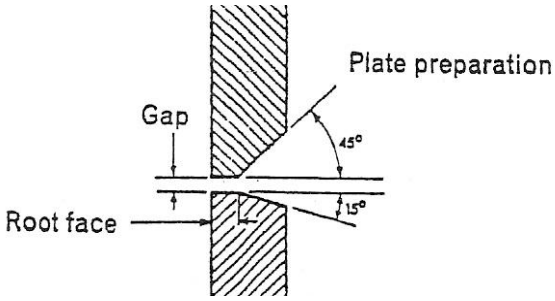

1. Deposit the root run without weaving, electrode angles 90° to the vertical plate and 65° - 75° to the line of the joint.
2. Adjust rate of travel to secure penetration into the root faces.
3. Deposit second run using slight weaving motion to bring the deposit to the outer edge of the lower fusion face. Reduce the electrode angle to the upper vertical plate to 55° - 65°.
4. Take care to leave space for the deposition of the third run by making the upper toe of the second run not more than half-way up the face of the first run.
5. Deposit third run with slight weaving bringing the deposit to the outer edge of the upper fusion face and securing smooth fusion at the junction with the second run.
   For this run increase the angle of the electrode to the upper vertical plate to 95° - 105°.
6. Back chip the weld and deposit a sealing run with 10 s.w.g. (3.25 mm.) electrode in the horizontal vertical position.

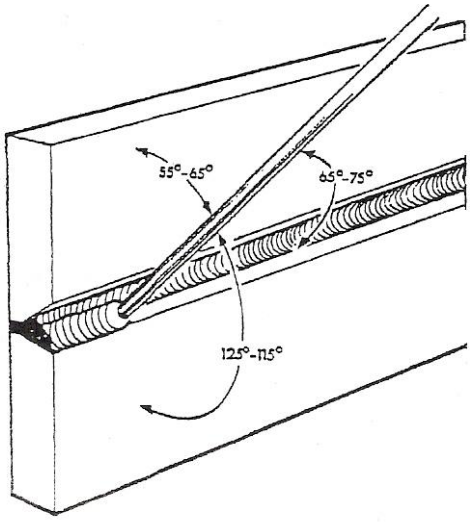

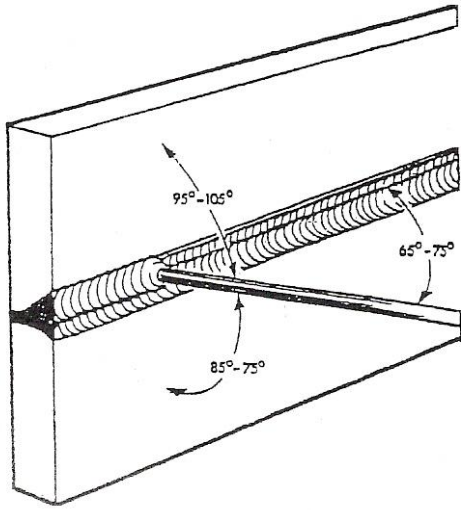

Material	3/8″ (10.0 mm) mild steel, 2 off, min. 2″ (50.0 mm) x 12″ (30.0 cm)
Preparation	Lower plate angle of bevel 15°; upper plate angle of bevel 45°; root face on both plates 1/16″ ± 1/32″ (1.5 mm ± 0.75 mm)
Assembly	Tack weld both ends to give an included angle of 60° - 65°; gap 1/16″ ± 1/32″ (1.5 mm ± 0.75″ mm). Support in a vertical position with line of joint horizontal and face of joint towards operator.
Electrode	1st run 10 s.w.g. (3.25 mm) 2nd and 3rd runs 8 s.w.g. (4.0 mm) Class 2 or 3.
Current	1st run 110-120 amperes 2nd and 3rd run 160-170 amperes.

Corner Joint

Example Procedure EP17

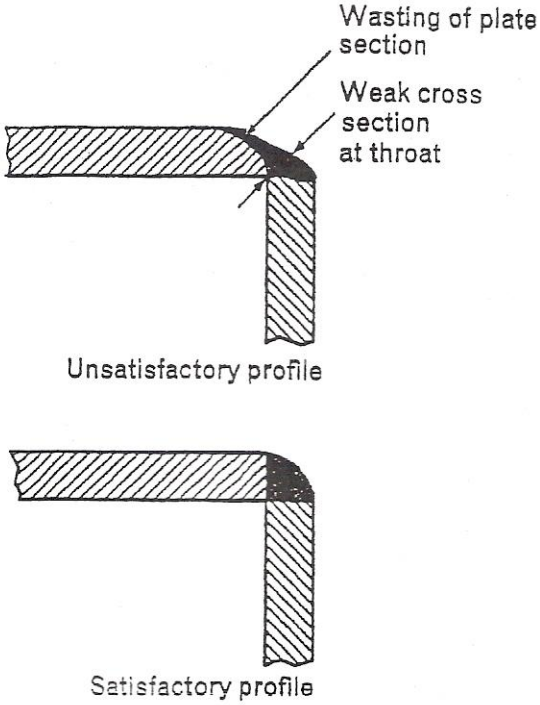

Material	1/8″ (3.25 mm) mild steel, otherwise as for EP16
Preparation	as per EP16
Assembly	as per EP16
Electrode	12 s.w.g. (2.5 mm) Class 2
Current	70 - 80 amperes

T Joint

Example Procedure EP18

1. Deposit a fillet weld with the 8 s.w.g. (4.0 mm) electrode.
2. Hold the electrode at an angle of 40° - 50° to the vertical plate and at 65° - 75° to the line of the joint, without weaving.
3. Counteract any tendency of deposited metal to fall towards the horizontal plate by increasing slightly the electrode angle to the vertical plate.
4. Adjust rate of travel so that a weld of equal leg length approximately ¼ (6.5 mm) is deposited.
5. After joint has cooled sufficiently to be handled weld the other side with the 6 s.w.g. (5.0 mm.) electrode, using same technique but slightly faster rate of travel to deposit same size of weld.

Material	1/2″ (12.5 mm) mild steel, 2 off, min. 2″ (50.0 mm) x 12″ (30.0 cm)
Preparation	Square edge
Assembly	Tack weld both ends so that the plates form an inverted T without any gap between the plates.
Electrode	1st side 8 s.w.g. (4.0 mm) 2nd side 6 s.w.g. (5.0 mm) Class 2.
Current	1st side 160-170 amperes 2nd side 200-220 amperes.

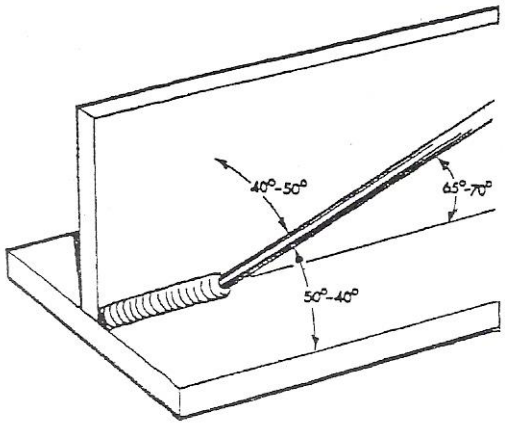

Sealing Run

To eliminate weakness or possible notch effect a butt weld (and sometimes a corner weld) is completed by depositing a small sealing run on the root side.

Frequently in fabrication work such a run would have to be deposited in the overhead position because the work could not be turned over. At this stage complete the practice butt welds by turning them over and depositing the sealing run in the flat position.

For good quality welding the back of a butt joint should be chipped out with a round-nose chisel, or gouged by flame or air-arc gouging process, so that clean metal at the root of the first run is exposed. A large deposit is not necessary and excessive reinforcement should be avoided.

It is unnecessary to back chip or back gouge fillet-welded corner joints.

MATERIAL	from EP10 and 11(a) as welded.
PREPARATION	wire brush back side of joint, chip off any excess of penetration bead.
ASSEMBLY	place welded joint on bench with face of weld down-wards.
ELECTRODE	8 s.w.g. (4.0 mm) Class 2.
CURRENT	160-180 amperes.

Example Procedure EP12

1. Deposit sealing run with a very slight transverse weaving motion with the electrode angle 65°-75°.
2. Adjust rate of travel to give a fillet weld having a leg length of 8/16" (4.5 mm).

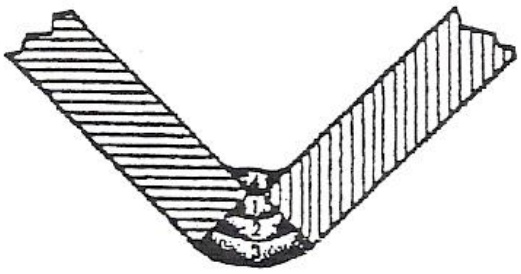

Figure 9 - Sealing Run

Flat Position

Single V Butt Joint

Example Procedure EP13

MATERIAL	3/8″ (10.0 mm) mild steel, 2 off, min. 2″ (50.0 mm) x 12″ (30.0 cm).
PREPARATION	Angle of bevel 30° root face 1/16″ ± 1/32″ (15 mm ± 0.75 mm).
ASSEMBLY	Tack weld both ends to give included angle 60°-65°: gap 1/16″ ± 1/32″ (1.5 mm ± 0.75 mm).
ELECTRODES	1st run 10 s.w.g. (3.25 mm) 2nd run 6 s.w.g. (5.0 mm) Class 2.
CURRENT	1st run 100-110 amperes 2nd run 200-220 amperes.

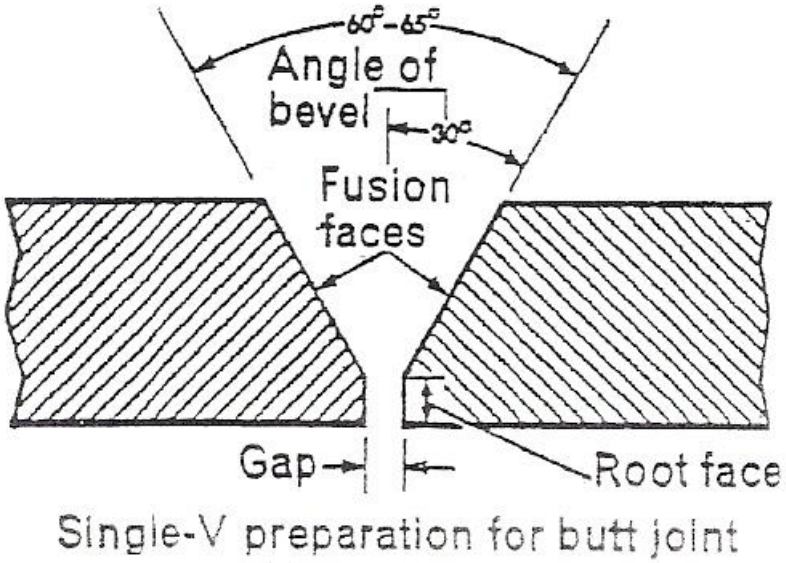

Figure 10 - Flat Position

1. Deposit root run without weaving with the electrode angle at 65°-75°.
2. Adjust rate of travel to secure penetration.

Outside Corner Joint

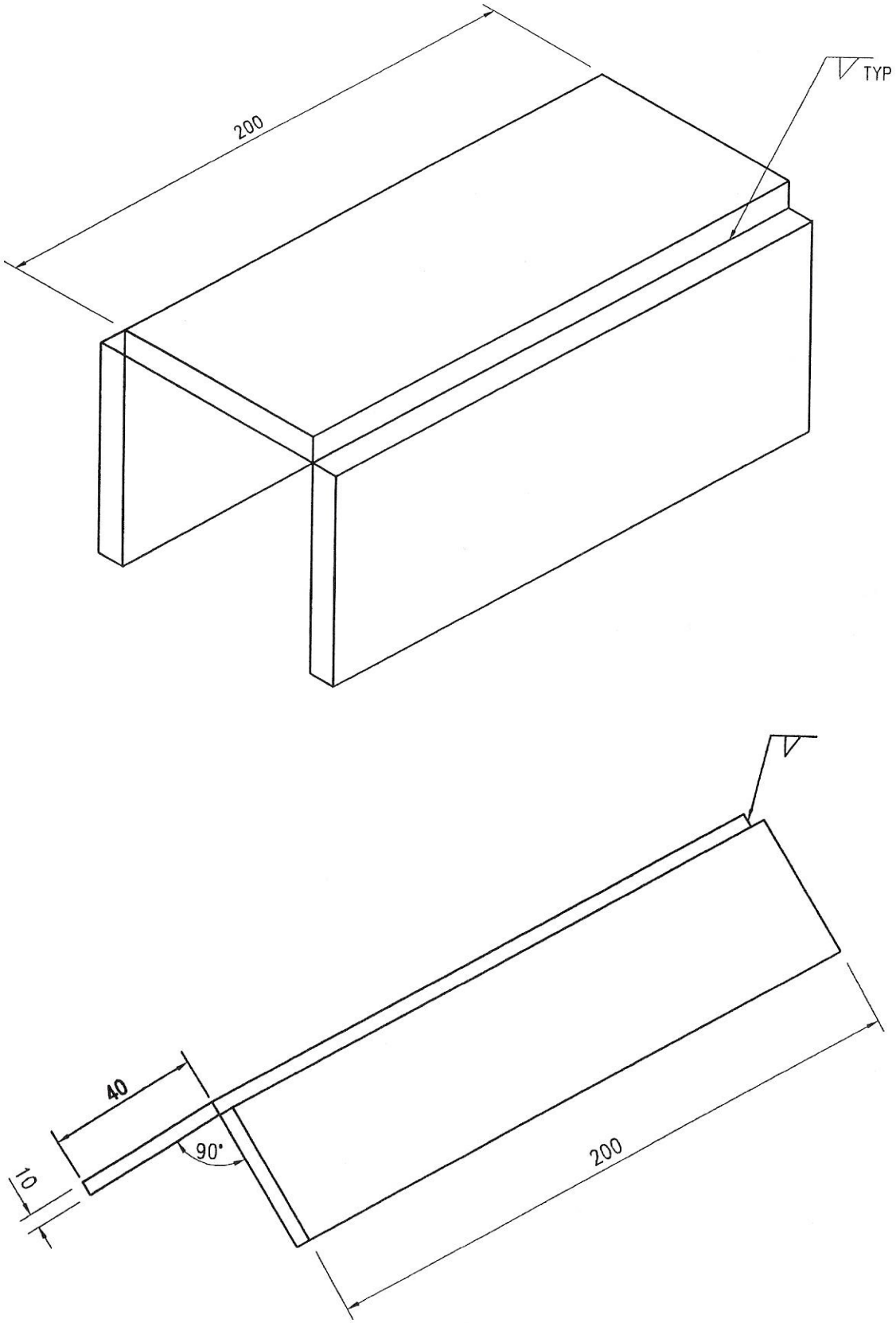

Figure 11 - Outside Corner Joint

Welding Joint Preparation

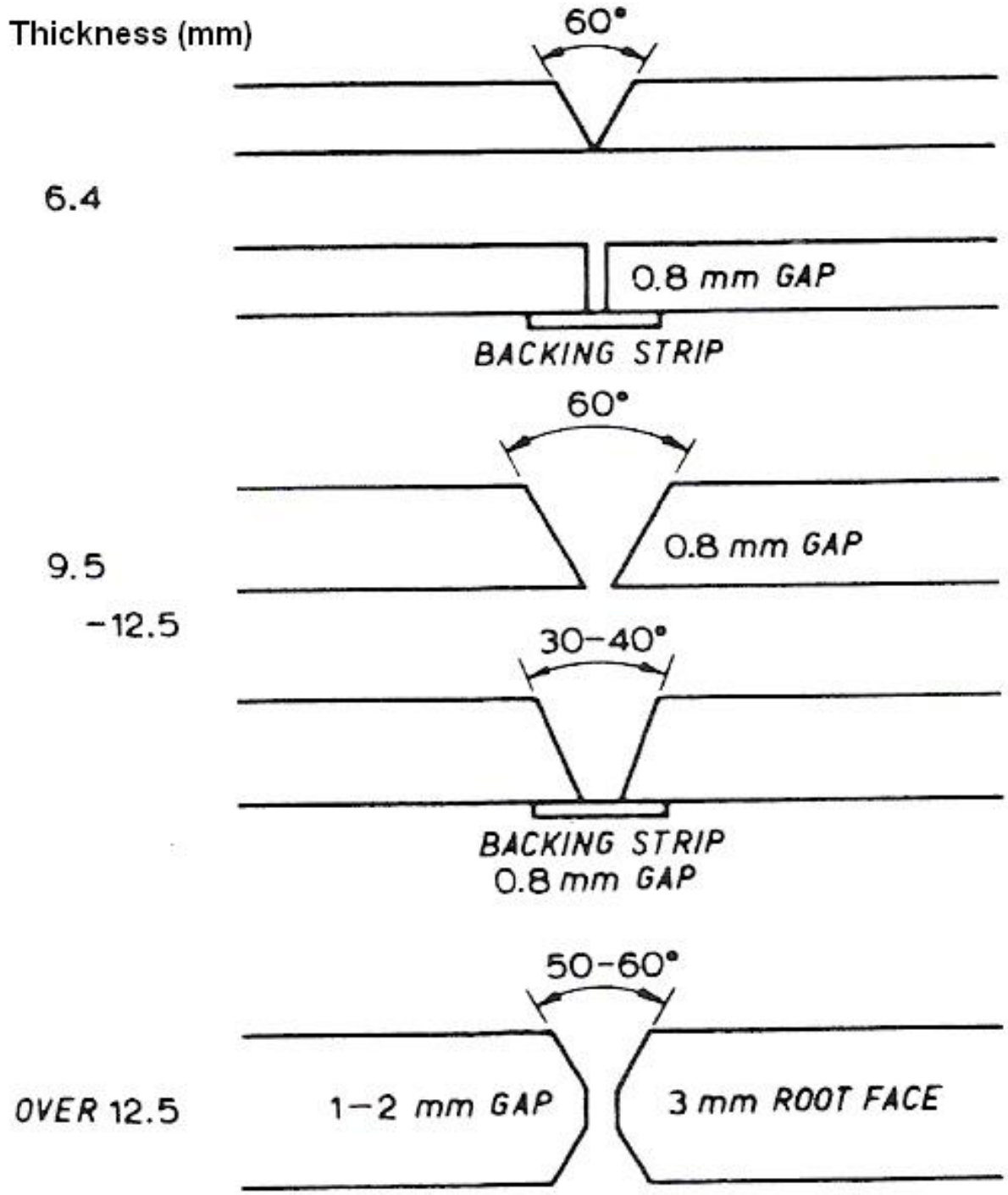

Figure 12 - Welding Joint Preparation

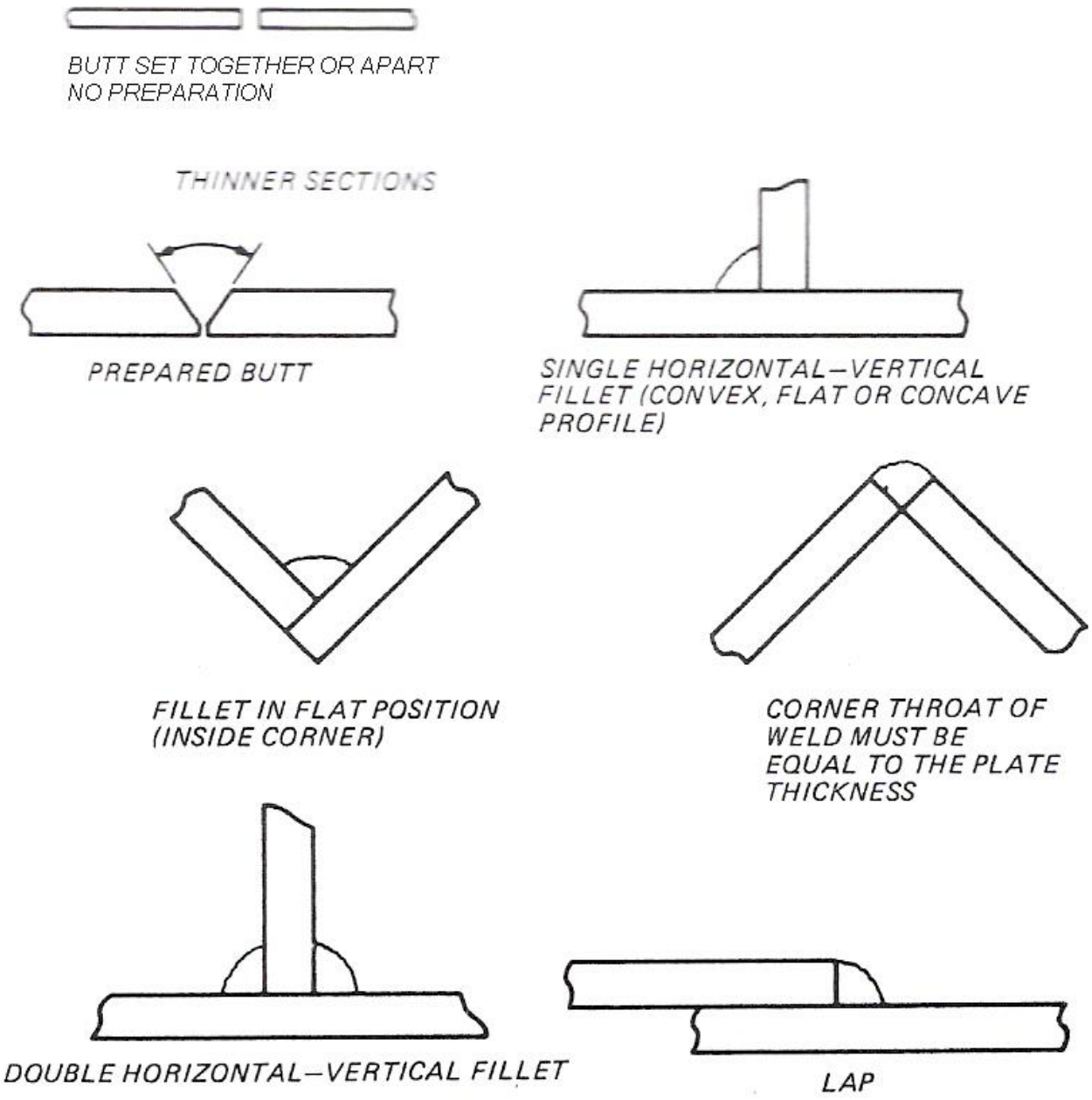

Figure 13 - Simple Welding Joints

Self Assessment

Questions on Background Notes – Module 2.Unit 5

1. In relation to Welding briefly explain the term Hard-Facing.

2. Out of the three listed forms of Distortion. Explain one.

a. Longitudinal Distortion.
b. Transverse Distortion.
c. Angular Distortion.

3. In diagram form sketch a Single-V Preparation for a Butt Joint, and show

a. Angle of Bevel
b. Gap
c. Root Face

Answers to Questions 1-3. Module2. Unit 5

1.

Hard-Facing:
Building up of worn surfaces.
For building up surfaces subjected to a large amount of wear it is usual to deposit a rod which has special hard-resisting properties. There is a large range of high quality rods available for example Croni 29/9, which have Cobalt/Nickel and other hard wearing qualities that may be suitable for building up gear teeth, spines, keyways and worn parts in general.

2.

a. **Longitudinal Distortion:**
When a deposit is made on one side of a joint, there is a tendency for the plate to bend upwards as it cools.

b. **Transverse Distortion:**
If a butt weld is made between two plates that are free to move the edges will be drawn together. In extreme cases these may overlap.

c. **Angular Distortion:**
Angular distortion pulls the plate being joined out of alignment. The tendency for angular distortion increases with the number of runs deposited.

3.

Figure 16. Single-V Preparation for Butt Joint:

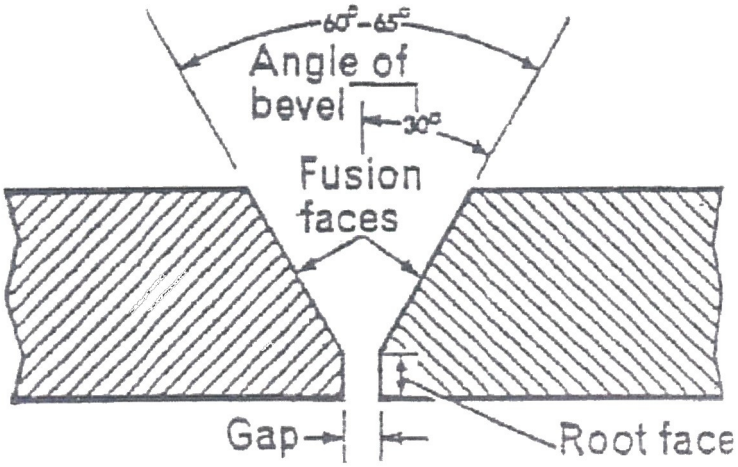

Index